B-Lock Side Release Hanger

B-LOCK™

Fast locking device solution for suspension of a variety of services, designed with an innovative side release mechanism.

FEATURES / BENEFITS

- Versatile hanger that is ideal for signage, lighting, acoustic, mechanical and electrical applications
- Up to six times faster to install than traditional methods of installation
- Ergonomic side release functionality allows for rapid adjustment
- Discreet and aesthetic design
- For use with B-Lock 1.5 mm, 2 mm and 2.5 mm wire rope

INSTALLATION & ADJUSTMENT

1.

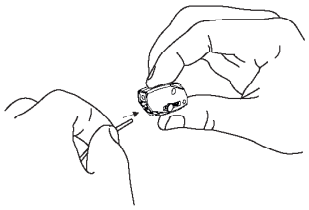

2.

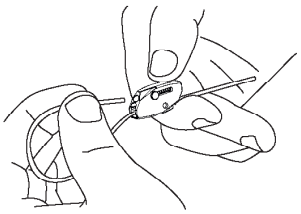

3.

4. Release/Adjust

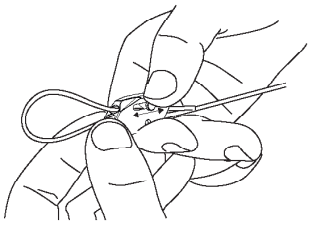

Ensure a minimum 75 mm of tail wire exits the hanger.

SPECIFICATION

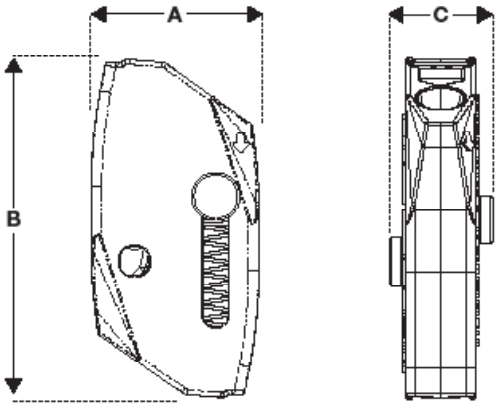

Dimension	No.2 (mm)
A	17
B	34
C	10

FOR USE WITH B-LOCK WIRE ROPE

SUBMITTAL INFORMATION

Safe Working Load:

No.2 - 1.5 mm / 35 kg
2.0 mm / 60 kg
2.5 mm / 70 kg

Material:

Housing - Type ZA2 Zinc
Button - Brass (5 µm Nickel Plated)
Wedge - Sintered steel hardened to min. 56 Rockwell C
Spring - Stainless Steel (Type 302)
End Cap - UV stabilised homopolymer propylene

Supplied By:

fixmart®

PI-BLOCK-3683-ENG
Published 08/2020